- Installation and wiring of luminaire must be in accordance with all applicabie local codes.
- Installation,inspection,and maintenance of luminaires should be performed by a qualified electrician.
- DO NOT make or alter any open holes in the luminaire Do not modify the luminaire.
- DO NOT install damaged product.
- Make sure electrical power is OFF before and during installation and maintenance.
- Make sure the equipment is properly grounded.
- Make sure the supply voltage is same as the rated fixture voltage.

Slip Fitter Mount

1 Wire the AC cable correctly and fix the luminaire to the pole by screws.

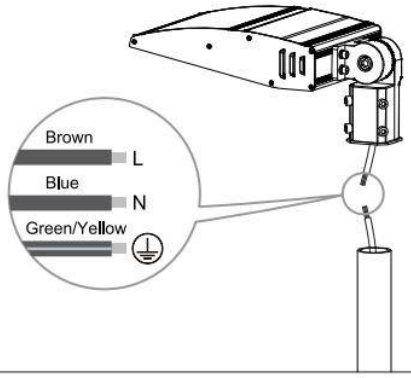

2 Adjust the slip fitter to the desired angle, then tighten the screws on the slip fitter.

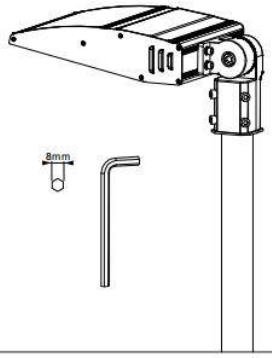

Bracket Mount

1 Fix the luminaire to mounting surface by bolts and nuts.

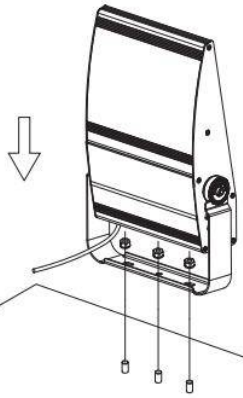

2 Loosen the screws on both side of the bracket and adjust the luminaire to the desired angle, then tighten the screws.

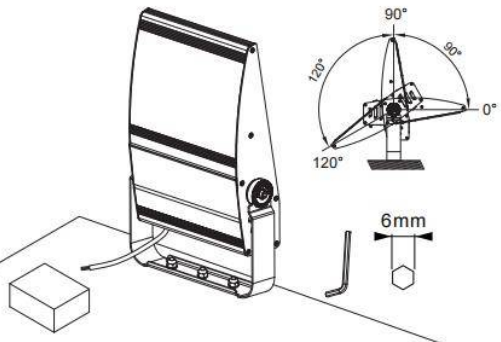

3 Wire the AC cable correctly.

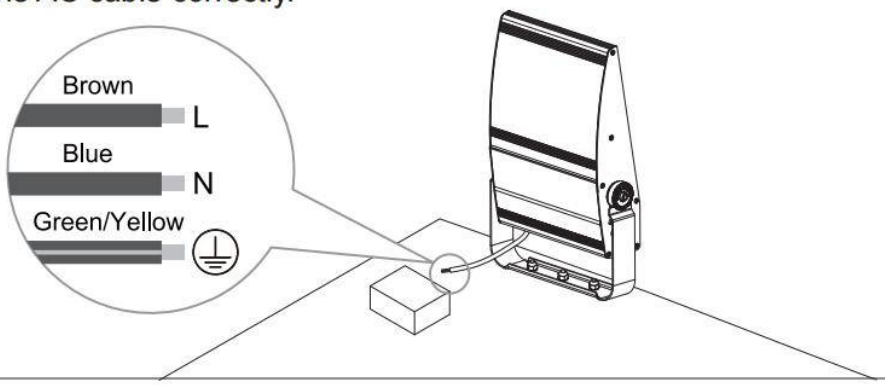

Trunnion Mount

1

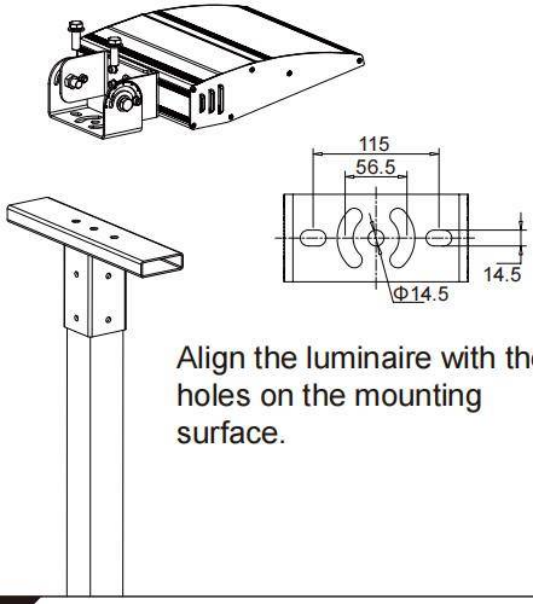

Align the luminaire with the holes on the mounting surface.

2

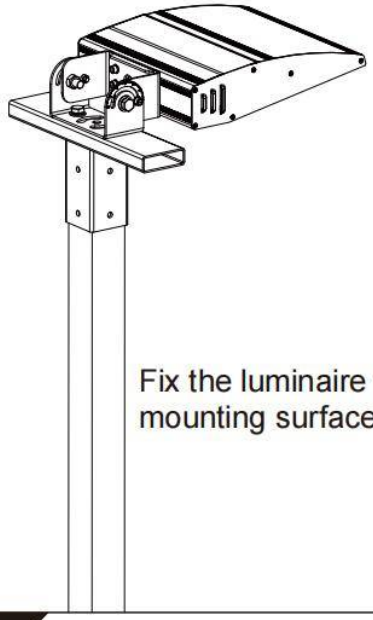

Fix the luminaire to the mounting surface by screws.

3

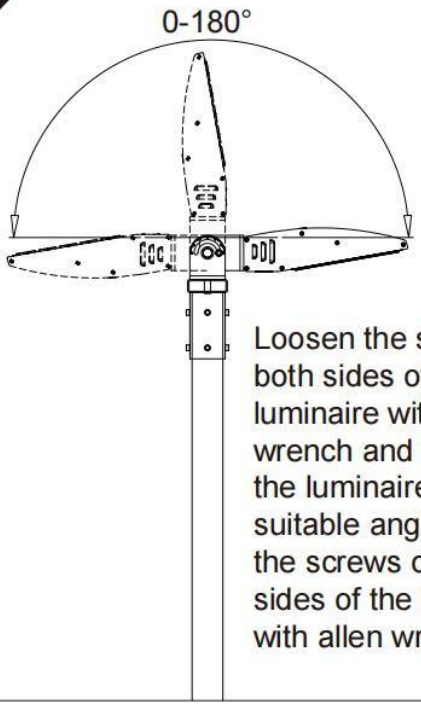

Loosen the screws on both sides of the luminaire with allen wrench and then adjust the luminaire to the suitable angle. Tighten the screws on both sides of the luminaire with allen wrench.

4
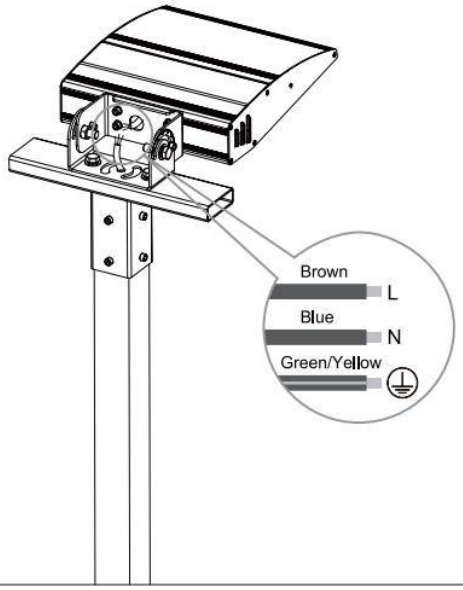
Wire the AC cable correctly.